TRANSMISSION CORPORATION OF ANDHRA PRADESH LIMITED

VIJAYAWADA::ANDHRA PRADESH

SUPPLY OF
120 KN AND 160 KN SILICON RUBBER COMPOSITE INSULATORS OF 400KV RATING

TECHNICAL SPECIFICATION FOR SILICON RUBBER COMPOSITE INSULATORS

1 SCOPE:

This specification covers design, manufacture, testing at manufacturer's works before dispatch and supply of Silicone Rubber Composite Insulators.

2. STANDARDS

The manufacturer should confirm the product with following Indian Standard, International Standards containing latest revisions, amendments, changes adopted.

Sl. No.	Indian Standards	Title	International Standards
1	IS:209-1992	Specifications for Zinc	BS:3436
2 3	IS:406-1991	Method of Chemical Analysis of Slab Zinc Composite insulators for A.C. Over head Power lines with a nominal voltage greater than 1000V	BS:3436 IEC: 61109-1992
4	IS Part Part (II) - 1991 Part (II) - 1991	Methods of High Voltage Testing.	IEC 60060-1
5	IS : 2486 Part I – 1993 Part II – 1989 Part – III 1991	Specification for Insulator fittings for Over Head Power Lines with a nominal voltage greater than 1000V General requirements and Tests. Dimensional Requirements. Locking Devices.	IEC : 575 BS-3288 IEC-6020 IEC-60372
6	IS : 2629 – 1990	Recommended Practice for Hot dip galvanization for iron and steel.	ISO-1461 (E)
7	IS : 2633-1992	Testing of Uniformity of Coating of zinc coated articles.	
8	IS –6745-1990	Determination of weight of Zinc Coating on Zinc coated iron and steel articles.	BS : 443-1969 ISO 1460-1973
9	IS : 8263-1990	Methods of RI test of HV insulators	IEC-60437 NEMA Publication No. 07/1964 CISPR
10	IS : 8269-1990	Methods for Switching Impulse test on HV insulators.	IEC-60506
11		Salt Fog Pollution Voltage Withstand Test.	IEC – 60507
12		Guide for the selection of insulators in respect of polluted conditions.	IEC – 60815
13		Tests or insulators of Ceramic material or glass or glass for overhead lines with a nominal voltage greater than 1000V	IEC - 60363

Analysis of Material Properties:

(i) Housing material

(1)	Resistance to tracking & erosion	IEC 60587
(2)	Tear strength KN/m	ASTM D 624-B
(3)	Volume resistivity	IEC 60093
(4)	Resistance to Weathering & UV	ASTM G 53-96
(5)	Arc Resistance	ASTM-495-1973
(6)	Specific gravity	ASTM D 792
(7)	Dielectric strength in KV/mm	ASTM D 149/IEC 60243
(8)	Hardness -Shore(A)	ASTM D 2204
(9)	Ultimate elongation	ASTM D 412
(10)	Tensile Strength	ASTM D 412
(11)	Living Oxygen Index	ASTM D 2863

(ii) On Core Material

(1)	Dye penetration test:	IEC 61109
(2)	Percentage of Mass:	ASTM D 2584
(3)	Hardness Test (Bacol):	ASTM D 2584
(4)	Water absorption:	IEC 61109, ASTM D570
(5)	Specific gravity:	ASTM D792
(6)	Brittle fracture resistance test:	as per relevant IEC/ASTM.

However in an event of supply of insulators conforming to standards other than specified, the bidder shall confirm in his bid that these standards are equivalent to those specified. In case of award, salient features of comparison between the standards proposed by the bidder and those specified in this document will be provided by the supplier to establish equivalence.

3. ATMOSPHERIC CONDITIONS:

i)	(a)	Maximum temperature of air in shade	50 Deg C
	(b)	Maximum average temperature	40 Deg C
ii)		Minimum temperature of air in shade	7.5 Deg C
iii)		Maximum temperature of air in shade attainable by an object exposed to sun.	70 Deg C
iv)		Maximum humidity	83%
v)		Average number of thunder-storm days per annum	50
vi)		Average number of rainy days per annum	90
vii)		Average rain fall per annum	1500mm
viii)		Number of months of tropical monsoon conditions	4 months.
ix)		Maximum wind pressure	200 Kg/Sq. Metrs.

x)	Altitude not exceeding above MSL.	1000 Metres
xi)	Level of pollution	very heavily polluted

4. SYSTEM CONDITIONS.

Electrical system Data:

a)	System Voltage (KV rms)	:	400
b)	Max. Voltage (KV rms)	:	420
c)	Lightning Impulse withstand Voltage (Dry & Wet) (KVP)	:	1550
d)	Power frequency withstand Voltage (wet) (KVP)	:	680
e)	Short circuit level and duration:		63 KA per one second

The materials offered shall be suitable for operation in tropical climate in which they will be subject to the full rays of the sun and inclement weather and shall be able to withstand wide range of temperature variations. The humidity may be as high as 100% during rainy season and as low as 10% during dry season. The prevailing weather conditions are given above.

Reference atmospheric conditions for which insulator characteristics shall be expressed for the purpose of comparison are given below.

Ambient temperature	20 Deg C
Barometric pressure	1013 Millibars
Absolute humidity	11 gms. Of water per cubic Metre corresponding to 63 percent relative humidity at 20 Deg.C

Tests for the purpose of this specification may be carried out under conditions naturally obtaining at the time of the test. The barometric pressure, air temperature and humidity shall be recorded for the purpose of corrections.

5.0 GENERAL REQUIRMENT

The design, manufacturing, processes, tolerances and inspection of composite insulators shall confirm to the following.

5.1 Language and units.

5.1.1 All correspondence, literature, drawings and markings shall be in the English language.

5.1.2 Dimensioning shall be in the SI (Metric System) units. Manufacture should mention the standard adopted for Dimensioning & tolerance principals considered for design.

5.1.3 **LOCATIONS:-** The Silicone Rubber Composite Insulators are to be used for 400kV Tr. Line located near thermal power stations using coal, near sea coast and in the vicinity of cement factories which are getting polluted by certain deposits from the sea, salt deposits in the water vapour from cooling towers coal dust & cement/Fly ash. The clause of pollution is very heavily polluted and creepage distance required is 31mm/ KV.

6.0 DESIGN AND MATERIAL REQUIRMENT

6.1 Core:

The core shall be glass-fibre reinforced epoxy resin rod (FRP) of high strength. Both, glass fibre and resin shall be optimized in the FRP rod. Glass fibres with low content in alkalies shall be boron free E glass or Boron free electrically corrosion resistance (ECR) glass. Use of resin with hydrolysis trend due to water penetration should be prevented i.e. matrix of the FRP rod shall be Hydrolysis resistant. Suitability of Epoxy matrix as well as interface between matrix and fibres is to be considered as design parameter to prevent brittle fracture. The FRP rod should be void free and shall be manufactured through Pultrusion process.

6.2 Housing:

The core of the composite insulator shall be completely covered by a continuous housing consisting of a sheath-weather shed. For moulding of entire weather shed structure on the rod in a one shot moulding process to be employed to avoid multiple i.e. metal fittings may be installed on the rod prior to moulding of the shed controlling moulding lines.

The base polymer shall be 100% Silicon Rubber prior to the addition of reinforcing fillers.

The thickness of compounding material on core should be minimum 3 mm. Manufacturer should furnish a description of its Quality Assurance Programme including fabrication, testing and inspection for any material (i.e. rubber), components (i.e. rod) or hardware (i.e. end fittings) The manufacturer has had fabricated by others should also be included.

Manufacturing methods and material composition documentation will be a part of Technical Bid to be submitted along with offer.

Insulator should have hermatically sealed structure in which the housing material is moulded to cover the interface between the end fitting and the FRP rod. This seal should never be broken during testing or otherwise.

6.3 End fittings:

The composite insulators shall be socket and ball type with the necessary coupling arrangement such that pin shall move freely in the socket but do not get disengaged while in service under various operating and atmospheric conditions.

The socket & ball type metal end fittings shall be designed to transmit the mechanical load to the core & the end fittings shall maintain uniform and consistent mechanical strength Material and methods used in the fabrication of metal parts shall be selected to provide good toughness and ductility. Metal end fittings shall be made from a quality forged steel of Grade EN8 and shall be hot dipped galvanized in accordance with IS 2629. Metal end fittings shall be uniform and without sharp edges or corners and shall be free of cracks, flakes, slivers, slag, blow-holes shrinkage defects and localized porosity. The attachment to the FRP rod shall be performed with a symmetrically controlled crimping method control by acquistic method that compresses the metal

radially onto the rod without damage to the rod fibres or resin matrix while providing a strength equal to or greater than the defined and specified ultimate strength to the insulator.

The material used in fittings shall be corrosion resistant.

Nominal dimensions of the pin, ball and socket interior shall be in accordance Annexure -1. No joints in ball & socket or pin will be allowed. Outer portion of ball or socket should be Zinc sleeved with minimum 99.95% purity of electrolytic high grade Zinc.

The finished surface shall be smooth and shall have a good performance

The surface shall not crack or get chipped due to ageing effect under normal and abnormal service conditions or while handling during transit or erection.

The design of the fittings and the insulators shall be such that there is no local corona formation or discharges likely to cause the interference to either sound or vision transmission.

6.4 **GRADING RINGS:**

Grading rings shall be provided when system voltages are equal to or greater than 220 KV. For 220 KV level, grading ring is to be provided at energized end only. For 400 KV level, grading ring is to be provided at both ends of an insulator.

All grading rings and brackets shall be designed as an integral part of the insulator assembly with a positive mounting system that allows mounting in only one position. The design of the grading ring shall be such that ring can only be mounted with its orientation towards the weather sheds for maximum RIV and corona control. Grading rings shall be designed in such a manner that the rings can be readily installed and removed with hot line tools without disassembling any other part of the insulator assembly.

Grading ring height (is the distance from the end of the end fitting to the top of corona ring) should be so selected that maximum field minimizes & uniformly distributed along the insulator. Manufacturer should provide reports of successful electrical field modeling testing for the specific insulator design. The EFM should be three dimensional with results containing drawing depicting the electric field in various colours, each of a different voltage level. The result of this study should show that the voltage field surrounding the composite insulator is optimum along the entire length of insulator, with the effected hot end of the insulator being a critical location. The threshold at which corona may or may not be present should be defined as a figure in KV/mm for the designed insulator.

7.0 VERIFICATION OF HOUSING MATERIAL

The manufacturer should provide written verification about housing material, for which base polymer shall be 100% Silicon Rubber prior to the addition of reinforcing fillers considered will provide satisfactory performance in the particular environment mentioned at CI. No.3 It shall meet following requirements

Be homogenous, impermeable, with no fissures, bubbles and strange materials inclusions.

Be designed in order to avoid to avoid formation of localized discharges and to prevent interfaces humid penetration.
Be resistant to corona, KV radiation, ozone, atmospheric contamination, water penetration and power arcs.

8.0 BALL AND SOCKET DESIGNATION

The dimensions of the Ball and Socket shall be 20mm designation for 120KN & 160KN insulators in accordance with the standard dimensions stated in IEC:120/IS:2486(Part-II)

9.0 DIMENSIONAL TOLERANCE OF COMPOSITE INSULATORS:

The tolerance on all dimensions e.g. diameter, length and creepage distance shall be allowed as follows:

(0.04 d +1.5) mm when d $\leq$ 300 mm.
(0. 025. d +6) mm when d > 300mm.

Where d being the dimensions in millimeters for diameter, length or creepage distance as the case may be.

However, no negative tolerance shall be applicable to creepage distance.

9.1 The Bidder have to submit offer for Silicone Rubber Composite Insulators as per the following parameters.

System Voltage	Mechanical failing load	Creepage distance (mm)		Sectional length (mm)
		Total	Protected	
400 KV	120 KN	13020	5990	3335±50
	160 KN	13020	5990	3910±50

10.0 INTERCHANGEABILITY:

The composite insulators including the ball socket connections shall be standard design suitable for use with the hardware fittings of any make conforming to relevant IEC standards.

11.0 CORONA AND RI PERFORMANCE:

All surfaces shall be clean, smooth, without cuts, abrasions or projections. No part shall be subjected to excessive localized pressure. The insulator and metal part shall be so designed and manufactured that it shall avoid local corona formation and not generate any radio interference beyond specified limit under the operating conditions.

12.0 MARKINGS:

Each insulator shall be legibly marked with the following details as per IEC – 61109.

a. Name or trademark of the manufacturer.
b. Voltage and Type.
c. Month and year of manufacturing.
d. Minimum failing load/ guaranteed mechanical strength in kilo Newton followed by the word 'KN' to facilitate easy identification.
e. Country of manufacture.
f. Permanent Embossing – S. No. , Batch No, Month and Year, APTRANSCO.

13.0 PACKING:

All insulators shall be packed in strong corrugated box of minimum 7 ply duly paletted or wooden crates. The gross weight of the crates along with the material shall not normally exceed 100 kg to avoid handling problem. The crates shall be suitable for outdoor storage under wet climate during rainy season.

The packing shall be of sufficient strength to withstand rough handling during transit, storage at site and subsequent handling in the field.

Suitable cushioning, protective padding, or Dunn age or spacers shall be provided to prevent damage or deformation during transit and handling.

All packing cases shall be marked legibly and correctly so as to ensure safe arrival at their destination and to avoid the possibility of goods being lost or wrongly dispatched on account of faulty packing and faulty or illegible markings. Each wooden case / crate corrugated box shall have all the markings stenciled on it in indelible ink.

The bidder shall provide instructions regarding handling and storage precautions to be taken at site.

14.0 INSPECTION, TESTS AND STANDARDS:

14.1 Proto type or Design or Type: To evaluate core material, housing material, core assembly (core & end fittings), interfaces and connections of sample insulators.

Inspection includes the performance of acceptance, type and design tests. APTRANSCO reserves the right to carry out design and type tests to check conformity of the material with the proto type unit previously approved.

APTRANSCO reserves the right to attend the tests and perform inspections in any stage of the supply, appointing its inspectors and following the approved manufacturing schedule. Inspection and tests scheduled to happen during manufacture shall have their dates informed to APTRANSCO at least 10 days in advance.

The manufacture shall assure APTRANSCO's inspector the right to being fully acquainted with installations and apparatus, check calibrations, is present at the test, check results and in case of doubt, perform new inspections and claim the repetition of any test.

14.2 No material shall be dispatched from its point of manufacture before it has been satisfactorily inspected, tested, and necessary dispatch instructions are issued in writing, except for the cases where waiver of inspection is granted by competent authority of the Purchaser, and even in this case also written dispatch instructions will be issued. Any dispatches before the issue of Dispatch Instructions in writing will be liable for rejection and non-acceptance of the materials by the consignee.

14.3 The acceptance of any quantity of material shall in no way relieve the Bidder of any of his responsibilities for meeting all requirements of the specification, and shall not prevent subsequent rejection if such material is later found to be defective.

14.4 The sample taken from any numbers of crates for carrying out any type of tests will be to the suppliers account.

14.5 <u>TYPE TEST</u>

14.5.1 The type, acceptance, routine tests, any tests specifically demanded by the Purchaser and tests during manufacture shall be carried out on the Insulators free of cost. The test reports shall be in accordance with the socket cap material offered.

14.5.1.2 Type tests shall mean those tests, which are to be carried out to prove the process of manufacture and general conformity of the material to this specification. These tests shall have to be carried out at the Government Approved Testing Laboratory. Purchaser reserves the right to specify the name of the laboratory also, if so felt. The Type test reports shall not be older than ten years and shall be valid till validity of offer.

14.5.1.3.1 Acceptance Tests shall mean those tests, which are to be carried out on samples taken from each lot offered for pre-dispatch inspection, for the purposes of acceptance of that lot. These tests shall be carried out at the manufacturers works in presence of Purchaser's representative before the dispatch of the materials to the site.

14.5.1.4 Routine Tests shall mean those tests which are to be carried out on each of the Insulator to check requirements which are likely to vary during production. These tests shall be carried out by the manufacturer on each Insulator and shall have to furnish these reports to the Purchaser's representative during his visit for acceptance tests.

14.5.1.5 Tests during manufacture shall mean those tests, which are to be carried out during the process of manufacture and end inspection by the supplier to ensure the desired quality of the end product to be supplied by him, including all Quality Control checks and Raw Materials testing.

14.5.1.6 The standards to which these tests will be carried out are listed against them. Where a particular test is a specific requirement of this specification, the norms

and procedures of the test shall be as specified as mutually agreed between the Bidder and the purchaser in the Quality Assurance Programme.

14.5.1.7 For all type and acceptance tests, the acceptance value shall be the values guaranteed by the Bidder in the "Guaranteed Technical Particulars", of his proposal or the acceptance value specified in this specification, whichever is more stringent for that particular test.

14.5.2 **On the complete composite Insulator with Hardware Fittings:**

(a) Power frequency voltage withstand test with corona control rings/grading ring and arcing horns under wet condition-IEC:383-1993
(b) Impulse voltage withstand test under dry condition.-IEC:383-1993
(c) Wet switching Impulse withstand voltage. IEC :61109-1992
(d) Salt-fog pollution withstand test-Annexure-A
(e) Grading device test-Applicable to 220KV and above voltage class
(f) Electrical Field Modeling test (EFM)-Applicable to 220KV and above voltage class
(g) Power arc test

All the above type test shall be conducted on Single 'I' suspension and Double tension insulator along with hardware fittings.

14.5.3 On Composite Insulator Units.

(a) Tests on interfaces and connections IEC:61109-1992
  i) Dry Power Frequency Voltages Test
  ii) Sudden Load Release Test
  iii) Thermal Mechanical Test
  iv) Water immersion
  v) Steep Front Impulse Voltage Test
  vi) Dry Power Frequency Voltage Test

(b) Assembled Core Load – Type Tests-IEC:61109-1992
  (i) Average Falling Load of the Core of the assembled Insulator
  (ii) Control of the slope of the strength-time curve of the Insulator

(c) Test of Housing IEC: 61109-1992
  (i) Tracking and Erosion test.

(d) Test for the Core Material IEC:61109-1992
  (i) Dye Penetration Test
  (ii) Water Diffusion Test
(e) Brittle fracture resistance test – Annexure-A

(f) Multi stress test for 5000 hours as per Annexure- C-IEC:1109

(g) Mechanical load time test IEC:61109-1992 Clause 6.4

14.5.4 On Silicone material

(a) Flammability test IEC: 61109-Amd. 1 or Test as per UL94.
(b) Recovery of Hydrophobicity test-Annexure-A

14.6 Sample Tests (Acceptance Tests) -

When specified on a purchase order, sample tests shall be performed per ANSI C29.11& IEC:61109-1992.

(a) Verification of Dimensions
(b) Verification of Locking System-applicable only in the event ball and socket insulators is specified.
(c) Mechanical Load test- In process testing used to verify the mechanical system is acceptable.
(d) Galvanizing Test
(e) Silicone content test

One sample per lot up to a quantity of 200 Nos for 70KN/120KN/160KN each and two samples per lot over and above the quantity of 200 Nos for 70KN/120KN/160KN each i.e., shall be taken and test has to be performed through FT-IR (Fourier transform infrared). Spectroscopy & TGA (Thermogravimetric Analysis) or any other approved / acceptable method. Silicone content should not be less than 30%.

(f) Hydrophobicity
The surface of selected samples shall be cleaned with Isopropyl alcohol. Allow the surface to dry and spray with water. Record the HC classification.

(g) Dry penetration test on FRP Rod

14.7 Routine Tests:

The Following tests shall be performed on every insulator produced as per IEC:61109-1992.

(a) Mechanical Test: Every insulator shall withstand for a period not less than 10 seconds a tensile load equal to or greater than its Routine Test Load (50% of the Specified Mechanical Load)

(b) Visual Examination: Every insulator shall be examined to ensure its conformance to the manufacturer's drawing. Superficial polymer surface defects of an area less than 25 square millimeters (total area not to exceed 2% of total insulator surface area) and depth less than 1 mm shall be acceptance.

14.8 <u>Additional Tests</u>

14.8.1 The Purchaser reserves the right of getting done any other test(s) of reasonable nature carried out at Purchaser's premises, at site, or in any other place in addition to the aforesaid type, acceptance and routine tests to satisfy himself that the material comply with the specifications. In such case all the expenses will be to Suppliers account.

14.9 <u>Sample Batch For Type Testing</u>

14.9.1 The Bidder shall offer at least 10% of the ordered quantity or 300 nos. whichever is higher, for selection of samples required for conducting all the type test.

14.9.2 The Bidder is required to carry out all the acceptance tests successfully in the presence of Purchaser's representative before dispatch of the selected sample to the testing laboratory for type test.

15.0 TEST REPORTS

15.1. Copies of type test reports shall be furnished in at least two (2) copies along with one original. One copy shall be returned duly certified by the Purchaser only after which the material already inspected i.e. the Materials manufactured for selection of sample for type test, shall be dispatched on receipt of Dispatch Instructions from the Chief Engineer/ Projects, APTRANSCO, Vidyut Soudha, Vijayawada.

15.2 Record of routine test reports shall be maintained by the Bidder at his works for periodic inspection by the purchaser's representative.

15.3 Test Certificates of test during manufacture shall be maintained by the Bidder. These shall be produced for verification as and when desired by the Purchaser.

16.0 TEST FACILITIES

16.1 The following additional facilities shall be available at Supplier's works:-

a) Calibration Reports from Government approved testing laboratory of various testing and measuring equipment including tensile testing machine, resistance measurement facilities, burette, thermometer, barometer etc.

b) Finished insulator shall be checked for dimension verification and surface finish separately.

c) The bidder should have all the routine and acceptance testing facilities, in house**.**

16.0 QUALITY ASSURANCE PLAN

16.1 The bidder shall invariably furnish following information along with his offer, failing which his offer shall be rejected.

i) Statement giving list of important raw materials, proposed to be used in the manufacture of the insulator against this Specification, names of sub suppliers for the raw materials, list of standards according to which the raw materials are tested, list of tests normally carried out on raw materials in presence of Bidder's representative as routine and/or acceptance during production and on finished goods, copies of test certificates.

ii) Information and copies of test certificates as in (i) above is respect of bought out accessories.

iii) List of manufacturing facilities available.

iv) Level of automation achieved and lists of areas where manual processing exists.

v) List of areas in manufacturing process, where stage inspections are normally carried out for quality control and details of such tests and inspections.

vi) List of testing equipment available with the Bidder for final testing of Insulator specified. In case if the Bidder does not possess all the Routine and Acceptance testing facilities the tender will be rejected.

vii) The Purchaser reserves the right for factory inspection to verify the facts quoted in the offer. If any of the facts are found to be misleading or incorrect the offer of that Bidder will be our rightly rejected and he may be black listed.

viii) Special features provided to make it maintenance free.

ix) Bidder shall also submit the Field Quality Plan (FQP) along with Technical Bid.

16.2 The bidder shall also submit following information to the purchaser along with the technical Bid.

i) List of raw materials as well as bought out accessories, and the name of suppliers of raw materials as well as bought out accessories.

ii) Type test certificates of the raw material and bought out accessories.

iii) Quality assurance plan (QAP) with hold points for purchaser's inspection.

16.3 The Bidders shall submit the routine test certificates of all the bought out items, accessories etc.

17.0 **GUARANTEED TECHNICAL PARTICULARS:**

Full guaranteed particulars including dry and wet flashovers, puncture and impulse voltages, corona formation voltages, creepage distances, length, voltage distribution on strings etc., shall be furnished.

18.0 The prices shall be FIRM.

…..

ANNEXURE – A

1. Tests on Complete composite Insulator with Hardware Fittings

1.1 Salt – fog pollution withstand test

This test shall be carried out in accordance with IEC-60507. The salinity level for composite long rod insulators shall be 80 Kg/m^3 NACL.

2.0 Composite Long rod Insulator Units

2.1 Brittle Fracture Resistance Test

Assembled core load time test with container that contains in- HNO_3 concentric acid this is applied at the naked rod. The rod should be held at 80% of SML for the duration of the test.

The rod should not fail within the 96 hour test duration.

2.2 Recovery of Hydro phobicity Test

1) The surface of selected samples shall be cleaned with isopropyl alcohol. Allow the surface to dry and spray with water. Record the HC classification. Dry the sample surface.

2) Treat the surface with corona discharges to destroy the hydrophobicity. This can be done utilizing a high frequency corona tester. Holding the electrode approximately 3 mm from the sample surface slowly move the electrode over an area approximately 1`` x 1``. Continue treating this area for 2-3 minutes, operating the tester at maximum output.

3) Immediately after the corona treatment, spray the surface with water and record the HC classification. The surface should be hydrophilic with an HC value of 6 to 7. If not, dry the surface and repeat the corona treatment for a longer time until an HC of 6 to 7 is obtained. Dry the sample surface.

4) Allow the sample to recover and repeat the hydrophobicity measurement at several time intervals. Silicone rubber should recover to HC 1 – HC 2 within 24 to 28 hours, depending on the material and the intensity of the corona treatment.

3.0 Test on All components (As applicable)

3.1 Chemical Analysis of Zinc used for Galvanizing

Samples taken from the zinc ingot shall be chemically analysed as per IS 209-1979. The purity of zinc shall not be less than 99.95%.

3.2 Tests for Forgings.

The chemical analysis hardness tests and magnetic particle inspection for forgings, will be as per the internationally recognized procedures for these tests. The sampling will be based on heat number and heat treatment batch. The details regarding test will be as discussed and mutually agreed to by the Supplier and Owner in Quality Assurance Programme.

3.3 Tests on Castings.

The chemical analysis, mechanical and metallographic tests and magnetic, particle inspection for castings will be as per the internationally recognized Procedures for these tests. The samplings will be based on heat number and heat treatment batch. The details regarding test will be as discussed and mutually agreed to by the Supplier and Owner in Quality Assurance Programme.

4.0 Grading device test:

4.1 In addition to the electrical design tests, for 220 KV & above class insulator design with applicable grading device test, similar to the following described test:

Grading devices shall be tested using a mechanical shaker with at least a one inch stroke at the grading device and a frequency of no less than three cycles per second for a duration of 2,000,000 cycles. Movement shall be along the long axis of the insulator. The grading device shall be attached to the shaker in a vertical position. The test shall be considered successful if no movement is detected in the ring with respect to the insulator and there is no physical damage to the grading device and the attachment assembly.

The manufacturer should provide with documentation that the insulator design with applicable grading devices will minimize or eliminate corona discharge activity under wet and dry conditions.

5.0 **Power Arc Test:**

5.1 Three insulators having any one design of end fittings shall be tested for power arc endurance while tensioned horizontally at 3000ib. An arc shall be initiated across the insulator by means of a Copper shorting fuse wire. They are shall burn 15 to 30 cycles and its current magnitude is determined by ampere-time product (I&T) equal to a minimum of 150 kA cycles. Each insulator is only acceptable if there is no exposure of the core, no mechanical separation of the insulator, and no cracks in the housing (As per IEC61467-1997).

ANNEXURE - I

REQUIRED RATING AND ELECTRICAL CHARACTERISTICS

Sl. No.	Characteristics	For Silicone Rubber Composite Insulators string			
		220 KV		400 KV	
		70 KN	120 KN	160 KN	120 KN
1.	Type description	B&S		B&S	
2.	Colour & surface of rubber portion.	Grey			
3.	Ferrous parts	IEC 61109 & ASTM A 153			
4.	Check clip provided In the socket.	'R' Clip			
5.	Ball pin	Drop forged steel			
6.	Socket fitting	Malleable Ductile Iron			
7.	Ball pin designation	16 mm alternative "B"	20mm	20mm	20 mm
8.	a) Diameter and spacing of	AS PER IEC 61109			
	b) Tolerances				
9.	Minimum failing Load of insulator (strings)	70 KN	120 KN	160 KN	120 KN
10.	Minimum total creepage distance in mm	7595 mm	7595 mm	13020 mm	13020 mm
11.	Minimum protected creepage distance in mm	3800	3800	5990	5990
12.	Dry Arcing Distance between grading rings mm min.	1900	1900	3450 mm	3060 mm
13.	Combined Mechanical and Electrical strength	70 KN	120 KN	160 KN	120 KN
14.	One minute power Frequency withstand voltage (kV) Dry	460	460	680	680
14 (a)	Sectional length	1885	2030	3910	3335
15.	One minute power Frequency	460	460	630	630

	withstand voltage (kV) Wet				
16.	One minute power frequency Flashover voltage Dry/Wet (KV)	> 460	> 460	>630	>630
17. i)	AC wet withstand voltage : KV	460	460	630	630
ii)	L.I. Pos with stand voltage : KV	1050	1050	1550	1550
iii)	S.I. Wet WSV : KV	Not applicable		1050	1050
18.	Visible discharge voltage (kV)	-	-	320	320
19.	Impulse flash over voltage (kV) (min):				
	Positive	1050	1050	1550	1550
	Negative	1100	1100	1600	1600
20.	Flashover Power Frequency voltage (kV)				
	Dry	460	460	680	680
	Wet	460	460	630	630
21.	Standards according to which the rubber insulator shall be manufactured and tested.	IEC 61109/ ANSI C 29-11, 29 – 12			
22.	Mechanical breakings strength.	70KN	120KN	160 KN	120 KN
23.	Routine Mechanical Load	42 KN	72 KN	120 KN	90 KN
24.	Net weight of strings (approx).	9 KG	9 KG	21 KG	24 Kg

Annexure - II

GUARANTEED PERFORMANCE & OTHER PARTICULARS

(While furnishing these details, the values in Annexure-I also are to be furnished.)

Sl. No.	Description	For Silicone Rubber Composite Insulators string			
		220KV		400 KV	
		70 KN	120 KN	120 KN	160 KN
1.	a) Type of insulator (Ball and socket)				
	b) Size and designation ball and socket with standard to which it will conform.				
2.	Maker's name, address and country.				
3.	Dimensions:				
	Diameter in mm				
	Unit spacing in mm.				
	Creepage distance in mm.				
	i) Total				
	ii) Protected				
4.	Mechanical Values:				
	Combined Mechanical and Electrical strength in KGs.				
	Mechanical breaking strength in KGs.				
	Routine Mechanical test load (KGs.)				
5.	Electrical Values:				
	Power frequency Flashover Voltage DRY (KV)				
	Power frequency Flashover Voltage WET (KV)				
	Impulse flashover voltage 1.2 x 40 mircro second negative wave (KV)				
	Impulse flashover voltage 1.2x40 mircro Second negative				

wave (KV)

Power frequency withstand voltage : DRY (KV)

Power frequency withstand voltage : WET (KV)

Impulse withstand test voltage 1.2x40 micro second positive and negative wave (KV)

Power frequency puncture Voltage (KV)

6. Net weight of insulator unit in KGs.

7. Strandard specification to which insulators will conform.

8. Other particulars if any.

==========

SIGNATURE OF THE TENDERER

QUALIFICATION REQUIREMENTS

1. The bidder should be a manufacturer who must have designed, manufactured, tested and supplied to power utilities at least 40% of the tendered quantity of the goods/equipment of same or higher voltage class against quantity indicated in the "Schedule of Requirement" in one continuous period of 12 months in the last five years as on the date of opening of bid and its financial turnover during any one year of the last five years should have been equal or more than 100% value of the material now quoted.

   At least 20% of the similar material as indicated in the 'Schedule of Requirements' should be in successful operation since 2 years as on the date of opening of the Bid.

2. The bidder shall furnish Type Test Reports. The type tests must have been conducted on the material offered as per the relevant IS in recognized laboratory as per the latest revision of the relevant standards applicable. The date of type tests will not be earlier than five years as on the date of bid opening. The Bids received without type test reports will be treated as Non-Responsive.

….

1

ANNEXURE - I

STANDARDISED GUARANTEED TECHNICAL PARTICULARS FOR 220 kV SILICON RUBBER COMPOSITE INSULATORS

S.NO	Description	Unit		220KV 120KN
			For Heavily-Polluted areas. For all zones of AP.	
1	Type of the Insulator	Composite Polymer Insulator		
2	Standard according to which the Insulators manufactured and tested		IEC :61109	
	The type tests should have been conducted not earlier than 10 Years in the standard third party laboratory. The Manufacturer shall produce the type test reports at the time of acceptance tests.			
3	Name of the Material used in Manufacturing of the Insulators with Class/Grade			
a)	Material of Core (FRP rod)			
	i) E-Glass or ECR Glass		ECR Glass	
	ii) Boron Content		Boron free	
b)	Material of housing Silicon Content by weight		Silicon Rubber Min. 30% by weight	
c)	Material of End Fittings		Forged Steel Hot Dipped Galvanized	
4	Colour		Grey	
5	**Analysis of Material properties**	**Housing Material**		
			Reference Specification	**Specified Values**
a)	Resistance to tracking & erosion		IEC :60587	Min 4.5 kV
b)	Tear Strength	kN/m	ASTM D624-B	Min 12
c)	Volume Resistivity		IEC : 60093	Min 1 x 10^{13}
d)	Accelerated weathering test		IEC : 62217	No crack & No Surface degradation
e)	Specific Gravity		ASTM D792	1.50 to 1.58
f)	Dielectric Strength	kV/mm	ASTM D149/IEC : 60243	17.5
g)	Hardness (Shore A)		ASTM D2240	68 ± 7
h)	Ultimate Elongation		ASTM D412	Min 100
i)	Tensile Strength	kG/Sq.cm	ASTM D412	Min 40
j)	Flammability		IEC : 62217	Test specimen belongs to category V0 required
Core Material				
			Reference Specification	**Specified Values**
a)	Verification of dimensions		As per approved drawing	
b)	Dye penetration test		IEC :61109	No dye penetration for minimum of 15 minutes
c)	Percentage of glass content	%	ASTM D2584	Min 70%

2

d)	Hardness test		ASTM D2583	Min 50
e)	Water Absorption		ASTM D570	Max 0.1%
f)	Specific Gravity		ASTM D792	1.9 to 2.3
g)	Brittle fracture resistance test		As per Annexure of Tests	Shall withstand
6	**Electrical Characteristics**			
a)	Nominal System Voltage	KV		220
b)	Highest System Voltage	KV		245
c)	Wet Power Frequency Withstand Voltage	KV (rms)		460
d)	Dry Lighting Impulse Withstand Voltage			
	a) Positive	kv (peak)		1050
	b) Negative	Kv (peak)		1050
e)	RIV at 1 MHz when energized at (rms) under dry condition	Micro volt		<1000 at 156kv
f)	Creepage Distance (Min.)	mm		7595
7	Mechanical Characteristics			
a)	Specified Mechanical Load	KN		120
8	Dimensions of Insulator			
	i) Thickness of sheath	mm		3(min)
9	Method of fixing of Sheds to Housing (specify)	Injection Moulding		
10	Type Sheds	Aerodynamic		
11	Sectional Length	mm		2030±50
12	Ball & Socket designation	mm		20
13	Packing	Packing shall be done in paper tube cores /wooden crates.		
14	Markings	Pin Marking on Socket Fitting/ Laser Marking on last shed of insulator		
15	Quality of material & standard to which conform	IEC: 61109		

Annexure – II

GUARANTEED PERFORMANCE & OTHER PARTICULARS

(While furnishing these details, the values in Annexure-I also are to be furnished.)

Sl. No.	Description	For Silicone Rubber Composite Insulators string 220 KV	120 KN
(1)	(2)	(3)	(4)
1			
	a) Type of insulator		Tension
	(Ball and socket)		
	b) Size and designation ball and socket with standard to which it will conform.		20
2	Maker's name, address and country.		OLECTRA GREENTECH LIMITED 1&9, IDA, Phase II, Cherlapally, Hyderabad. India.
3	Dimensions:		
	Diameter in mm		Ø130/Ø100
	Shed spacing in mm.		48
	Creepage distance in mm.		
	i) Total		7595
	ii) Protected		NA
4	Mechanical Values:		
	Combined Mechanical and Electrical strength in KGs.		11500
	Mechanical breaking strength in KGs.		>11500 120kN
	Routine Mechanical test load (KGs.)		5750 60kN
5	Electrical Values:		
	Power frequency Flashover Voltage DRY (KV)		500
	Power frequency Flashover Voltage WET (KV)		500
	Impulse flashover voltage 1.2 x 50 micro second Positive wave (KV)		1100
	Impulse flashover voltage 1.2x50 micro Second negative wave (KV)		1100
	Power frequency withstand voltage : DRY (KV)		510
	Power frequency withstand voltage : WET (KV)		460
	Impulse withstand test voltage 1.2x40 micro second positive and negative wave (KVp)		1050
	Power frequency puncture Voltage (KV)		NA
6	Net weight of insulator unit in KGs. (Approx)		7.4
7	Standard specification to which insulators will conform.		IEC-61109
8	Other particulars if any.		

Ensure Vendor approval and validity during inspection

// APPROVED //

CHECKED

AEE-2 13/01/23 DEE-1 DESIGNS

DEE-2 DESIGNS 13/1/23

EE DESIGNS 13/1/23

MEGHA ENGINEERING & INFRASTRUCTURE LTD. S-2, Balapur

13/01/23 DEE-1/KOODLI

13/01 EE-1/GOODLI

SUPERINTENDING ENGINEER
400 KV PROJECTS, APTRANSCO
VIDYUT SOUDHA VIJAYAWADA-04

ALL DIMENSIONS ARE IN "mm"

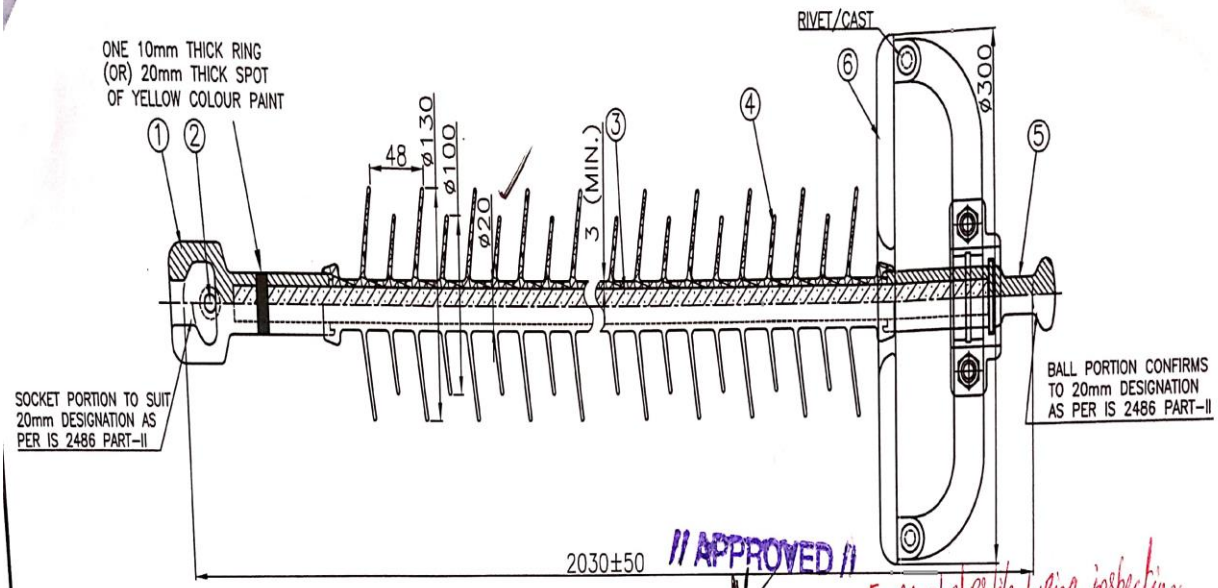

// APPROVED //

* Ensure shed profile during inspection

SUPERINTENDING ENGINEER
400 KV PROJECTS, APTRANSCO
VIDYUT SOUDHA, VIJAYAWADA

CHECKED

DEE-1 DESIGNS | DEE-2 DESIGNS | EE DESIGNS

FRP ROD DIA. SHALL BE MINIMUM 20mm

GUARANTEED TECHNICAL PARTICULARS:

DIMENSIONS:		
1. MINIMUM CREEPAGE DISTANCE	mm	7595
2. ARCING DISTANCE (MINIMUM)	mm	1800
3. COUPLING DESIGNATION IEC:60120/IS:2486	mm	20

MECHANICAL CHARACTERISTICS:		
1. SPECIFIED MECHANICAL LOAD	kN	120
2. ROUTINE TEST LOAD	kN	60

ELECTRICAL CHARACTERISTICS:		
1. NOMINAL SYSTEM VOLTAGE	kV	220
2. HIGHEST SYSTEM VOLTAGE	kV	245
3. SYSTEM FREQUENCY	HZ	50
4. WET 1 MINUTE POWER FREQUENCY WITHSTAND VOLTAGE	kV(rms)	460
5. DRY LIGHTNIING IMPULSE WITHSTAND VOLTAGE	kVp	1050
6. VISIBLE DISCHARGE VOLTAGE	kV	154

APPLICABLE STANDARDS	
1. INSULATOR	IEC: 61109-2008
2. GALVANISATION	IS: 2633-1986

SL.NO	DESCRIPTION	MATERIAL	QTY	DRG.NO	REMARKS
6	GRADING RING	AL' ALLOY	1 NO		
5	BALL FITTING	FORGED STEEL	1 NO		H.D.G
4	POLYMER HOUSING	SILICONE RUBBER	–		
3	CORE ROD	FIBREGLASS	1 NO		
2	SECURITY CLIP(R)	STAINLESS STEEL	1 NO		
1	SOCKET FITTING	SGCI/FORGED STEEL	1 NO		H.D.G

CUSTOMER REF:

PROJ.	
SCALE	NTS
DATE	21-07-2016
DRAWN	G.ASHOK
CHECKED	K.MADHU
APPROVED	Y.SUNDARRAJU

REV	DATE	REV	DATE	REV	DATE	REV	DATE	REV	DATE:5-12-17
	ALT.BY		ALT.BY		ALT.BY		ALT.BY	1	ALT.BY
								1.SL WAS 2030±56 2.SOCKET MATERIAL WAS SGCI	
APP.BY		APP.BY		APP.BY		APP.BY		APP.BY	

TITLE:
220kV-120kN COMPOSITE SILICONE RUBBER LONG ROD TENSION INSULATOR

OLECTRA GREENTECH LIMITED
(FORMERLY GOLDSTONE INFRATECH LIMITED)
PLOT NO:1&9, PHASE-II, IDA CHERLAPALLY,
HYDERABAD-500051. TELANGANA.

DRG NO. 01-16-LR-220-120-7595-2301(T) REV 1

Standard specification to which

Annexure – II

GUARANTEED PERFORMANCE & OTHER PARTICULARS

(While furnishing these details, the values in Annexure-I also are to be furnished.)

Sl. No.	Description	For Silicone Rubber Composite Insulators string	
		400kV	
		120kN	160kN
1	a) Type of insulator	Suspension	Tension
	(Ball and socket)		
	b) Size and designation ball and socket with standard to which it will conform.	20	20
2	Maker's name, address and country.	OLECTRA GREENTECH LIMITED 1&9, IDA, Phase II, Cherlapally, Hyderabad.	
3	Dimensions:		
	Diameter in mm	Ø120/Ø80/Ø96	Ø120/Ø80/Ø96
	Shed spacing in mm.	76	86
	Creepage distance in mm.		
	i) Total	13020	13020
	ii) Protected	NA	NA
4	Mechanical Values:		
	Combined Mechanical and Electrical strength in KGs.	12235	16315
	Mechanical breaking strength in KGs.	>12235	>16315
	Routine Mechanical test load (KGs.)	6117.5	8157.5
5	Electrical Values:		
	Power frequency Flashover Voltage DRY (KV)	>680	>680
	Power frequency Flashover Voltage WET (KV)	>680	>680
	Impulse flashover voltage 1.2 x 50 micro second Positive wave (KV)	>1550	>1550
	Impulse flashover voltage 1.2x50 micro Second negative wave (KV)	>1550	>1550
	Power frequency withstand voltage : DRY (KV)	>680	>680
	Power frequency withstand voltage : WET (KV)	680	680
	Impulse withstand test voltage 1.2x40 micro second positive and negative wave (KVp)	1550	1550
	Power frequency puncture Voltage (KV)	NA	NA
6	Net weight of insulator unit in KGs. (Approx)	10.5	13
7	Standard specification to which insulators will conform.	IEC-61109	IEC-61109
8	Other particulars if any.		

Ensure Vendor approval and validity tendering approval

CHECKED

13/01/23 AEE-2 Desig

DEE-1 DESIGNS

13/1/23 DEE-2 DESIGNS

13/1/23 EE DESIGNS

// APPROVED //

13/01/23 DE-1/Desig EE-1/Desig

SUPERINTENDING ENGINEER
400 KV PROJECTS, APTRANSCO
VIDYUT SOUDHA, VIJAYAWADA-04

ALL DIMENSION ARE IN "mm"

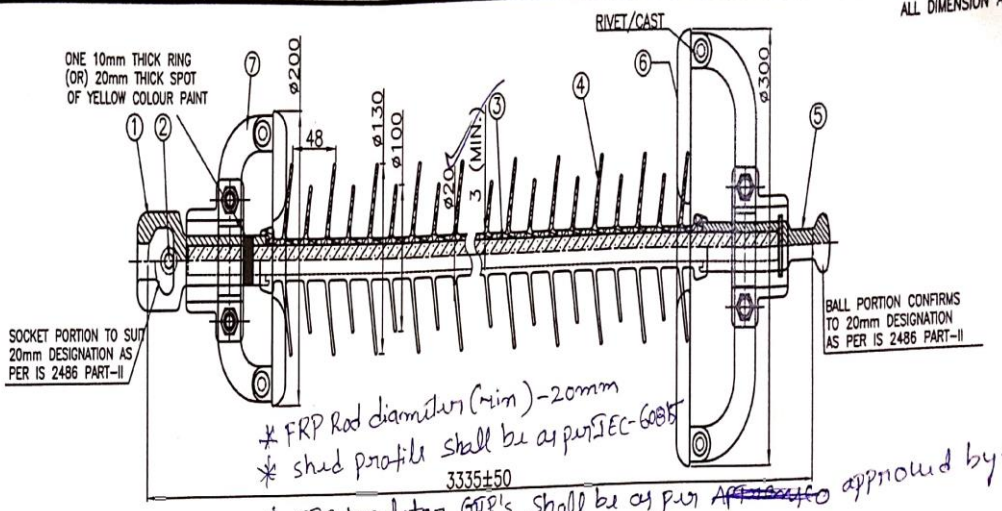

* FRP Rod diameter (min) - 20mm
* shed profile shall be as per IEC-60815
* SRC Insulator GTP's shall be as per ~~APTRANSCO~~ approved by AP Transco only

GUARANTEED TECHNICAL PARTICULARS:

DIMENSIONS:		
1. MINIMUM CREEPAGE DISTANCE	mm	13020
2. ARCING DISTANCE BETWEEN GRADING RINGS (MINIMUM)	mm	3060
3. COUPLING DESIGNATION IS:2486 PART 2/IEC:120	mm	20

MECHANICAL CHARACTERISTICS:		
1. SPECIFIED MECHANICAL LOAD	kN	120
2. ROUTINE TEST LOAD	kN	60

ELECTRICAL CHARACTERISTICS:		
1. NOMINAL SYSTEM VOLTAGE	kV	400
2. HIGHEST SYSTEM VOLTAGE	kV	420
3. SYSTEM FREQUENCY	HZ	50
4. WET 1 MINUTE POWER FREQUENCY WITHSTAND VOLTAGE	kV(rms)	680
5. DRY LIGHTNIING IMPULSE WITHSTAND VOLTAGE	kVp	1550
6. RIV AT 1MHZ FOR PHASE TO EARTH VOLTAGE OF 305KV (RMS) UNDER DRY CONDITION (MAX)	µV	1000
7. WET SWITCHING IMPULSE WITHSTAND VOLTAGE	kVp	1050
8. CORONA EXTINTION VOLTAGE UNDER DRYCONDITION (PHASE TO EARTH)	kV(rms)	320
9. THE INSULATOR SHALL WITHSTAND 160kG/m³ NACL SALINITY LEVEL AT 242kV(RMS) PHASE TO EARTH VOLTAGE		

APPLICABLE STANDARDS	
1. INSULATOR	IEC: 61109-2008
2. GALVANISATION	IS: 2633-1986

NOTES:
1. FOLLOWING MARKINGS BY PIN MARKING/LASER MARKING ON SOCKET FITTING/SHED
   OCL
   MONTH & YEAR
   400kV
   120kN
2. GALVANISATION CONFORMS TO IS: 2629-1990, 2633-1992, 6745-1990
3. MASS OF ZINC COATING SHALL BE 600gm/sq.m MIN
4. PURITY OF ZINC USED SHALL BE 99.95%
5. TOLERANCE ON DIMENSIONS AS PER STANDARD IEC: 61109
6. SILICON CONTENT FOR WEATHER SHEDS AND HOUSING > OR = 30% BY WEIGHT
7. MIN. THICKNESS OF SHEATH COVERING OVER THE CORE-3mm
8. BALL AND SOCKET DESIGNATION-20mm

CHECKED

DEE-1 DESIGNS 17/1/23 | DEE-2 DESIGNS 13/1/23 | EE DESIGNS 13/1/23

APPROVED

SUPERINTENDING ENGINEER 400 KV PROJECTS, APTRANSCO VIDYUTSOUDHA, VIJAYAWADA

ITEM	DESCRIPTION	MATERIAL	DRAWING NO	QTY	REMARKS
7	GRADING RING EARTH SIDE	AL'ALLOY		1 No	
6	GRADING RING LIVE SIDE	AL'ALLOY		1 No	
5	BALL FITTING	FORGED STEEL		1 No	HDG
4	POLYMER HOUSING	SILICONE RUBBER			
3	CORE ROD	FIBREGLASS		1 No	
2	SECURITY CLIP(R-CLIP)	STAINLESS STEEL		1 No	
1	SOCKET FITTING	SGCI/FORGED STEEL		1 No	HDG

CUSTOMER REF:

SCALE	NTS
DATE	04-12-2015
DRAWN	G.ASHOK
CHECKED	K.MADHU
APPROVED	Y.SUNDARRAJU

TITLE: 400kV COMPOSITE SILICONE RUBBER LONG ROD INSULATOR FOR SUSPENSION STRING(120kN)

OLECTRA GREENTECH LIMITED (FORMERLY GOLDSTONE INFRATECH LIMITED) PLOT NO:1&9, PHASE-II, IDA CHERLAPALLY, HYDERABAD-500051, TELANGANA.

DRG NO. 01-15-LR-400-120-13020-2200(T) REV 0

REV	DATE	REV	DATE	REV	DATE	REV	DATE	REV	DATE
	ALT.BY		ALT.BY		ALT.BY		ALT.BY		ALT.BY
APP.BY		APP.BY		APP.BY		APP.BY		APP.BY	

ALL DIMENSION ARE IN "mm"

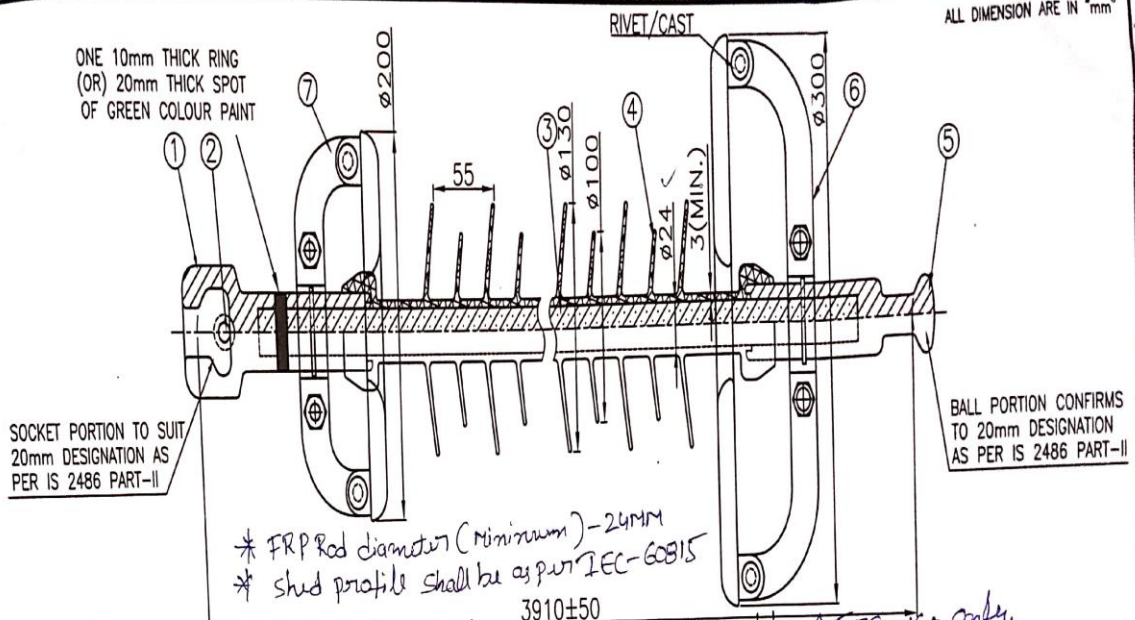

* FRP Rod diameter (Minimum) - 24MM
* Shed profile shall be as per IEC-60815
* SRC Insulator GIP's shall be as per approved by APTRANSCO only.

GUARANTEED TECHNICAL PARTICULARS:

DIMENSIONS:		
1. MINIMUM CREEPAGE DISTANCE	mm	13020
2. ARCING DISTANCE BETWEEN GRADING RINGS (MINIMUM)	mm	3450
3. COUPLING DESIGNATION IS:2486 PART 2/IEC:120	mm	20

MECHANICAL CHARACTERISTICS:		
1. SPECIFIED MECHANICAL LOAD	kN	160
2. ROUTINE TEST LOAD	kN	80

ELECTRICAL CHARACTERISTICS:		
1. NOMINAL SYSTEM VOLTAGE	kV	400
2. HIGHEST SYSTEM VOLTAGE	kV	420
3. SYSTEM FREQUENCY	HZ	50
4. WET 1 MINUTE POWER FREQUENCY WITHSTAND VOLTAGE	kV(rms)	680
5. DRY LIGHTNIING IMPULSE WITHSTAND VOLTAGE	kVp	1550
6. RIV AT 1MHZ FOR PHASE TO EARTH VOLTAGE OF 305KV (RMS) UNDER DRY CONDITION (MAX)	µV	1000
7. WET SWITCHING IMPULSE WITHSTAND VOLTAGE	kVp	1050
8. CORONA EXTINTION VOLTAGE UNDER DRYCONDITION (PHASE TO EARTH)	kV(rms)	320
9. THE INSULATOR SHALL WITHSTAND 160kG/m³ NACL SALINITY LEVEL AT 242kV(RMS) PHASE TO EARTH VOLTAGE		

APPLICABLE STANDARDS	
1. INSULATOR	IEC: 61109-2008
2. GALVANISATION	IS: 2633-1986

NOTES:
1. FOLLOWING MARKINGS BY PIN MARKING/LASER MARKING ON SOCKET FITTING/SHED
   OGL
   MONTH & YEAR
   400kV
   160kN
2. GALVANISATION CONFORMS TO IS: 2629-1990, 2633-1992, 6745-1990
3. MASS OF ZINC COATING SHALL BE 600gm/sq.m MIN
4. PURITY OF ZINC USED SHALL BE 99.95%
5. TOLERANCE ON DIMENSIONS AS PER STANDARD IEC: 61109
6. SILICON CONTENT FOR WEATHER SHEDS AND HOUSING > OR=30% BY WEIGHT
7. MIN. THICKNESS OF SHEATH COVERING OVER THE CORE-3mm
8. BALL AND SOCKET DESIGNATION-20mm

CHECKED

DEE-1 DESIGNS — DEE-2 DESIGNS — EE DESIGNS

ITEM	DESCRIPTION	MATERIAL	DRAWING NO	QTY	REMARKS
7	GRADING RING EARTH SIDE	AL'ALLOY		1 No	
6	GRADING RING LIVE SIDE	AL'ALLOY		1 No	
5	BALL FITTING	FORGED STEEL		1 No	HDG
4	POLYMER HOUSING	SILICONE RUBBER		–	
3	CORE ROD	FIBREGLASS		1 No	
2	SECURITY CLIP(R-CLIP)	STAINLESS STEEL		1 No	
1	SOCKET FITTING	SGCI/FORGED STEEL		1 No	HDG

REV	DATE	REV	DATE	REV	DATE	REV	DATE	REV	DATE
	ALT.BY		ALT.BY		ALT.BY		ALT.BY		ALT.BY
APP.BY		APP.BY		APP.BY		APP.BY		APP.BY	

APPROVED

SUPERINTENDING ENGINEER
400 KV PROJECTS, APTRANSCO
VIDYUT SOUDHA, HYDERABAD-500 082

CUSTOMER REF:

TITLE: 400kV COMPOSITE SILICONE RUBBER LONG ROD INSULATOR FOR TENSION STRING(160kN)

SCALE	NTS
DATE	07-07-2016
DRAWN	G.ASHOK
CHECKED	K.MADHU
APPROVED	Y.SUNDARRAJU

OLECTRA GREENTECH LIMITED
(FORMERLY GOLDSTONE INFRATECH LIMITED)
PLOT NO:1&9, PHASE-II, IDA CHERLAPALLY,
HYDERABAD-500051, TELANGANA.

DRG NO. 01-16-LR-400-160-13020-2296(T) REV 0

220 kV

REV.	DATE	DESCRIPTION	APPD.

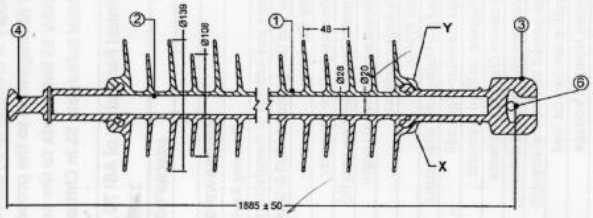

Shed profile shall be as per IEC-60815

CHECKED

AEE DEE-1 DESIGNS DEE-2 DESIGNS EE DESIGNS

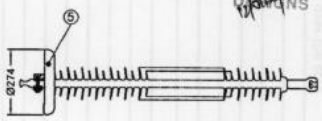

Marking to be embossed at "X"	Marking to be embossed at "Y"
ABI	MONTH & YEAR

ALL INFORMATION CONTAINED IN THIS DOCUMENT IS CONFIDENTIAL & SHOULD NOT BE USED WITHOUT PROPER CONSENT OF ADITYA BIRLA INSULATORS

NOTES:
1. GALVANISATION CONFORMS TO THICKNESS OF COATING OF 620 gm/M²
2. TOLERANCE ARE IN ACCORDANCE WITH IEC 61109
3. TEST TO BE PERFORMED IN ACCORDANCE WITH IEC 61109
4. ALL DIMENSIONS ARE IN mm

TECHNICAL PARTICULARS Compliance to IEC 61109 Ed.2.0 & IEC 62217			IEC 60815
			70 / 90 KN
	DRAWING NUMBER		0 985 474
1.	MECHANICAL CHARACTERISTICS		
	SPECIFIED MECHANICAL LOAD	KN	70 / 90
	ROUTINE TEST LOAD	KN	35 / 45
2.	DIMENSIONAL CHARACTERISTICS		
	SECTION LENGTH	mm	1885 ± 50
	CREEPAGE DISTANCE Min.	mm	7595
	DRY ARCING DISTANCE	mm	1730
3.	ELECTRICAL CHARACTERISTICS		
	NOMINAL SYSTEM VOLTAGE	kV	220
	HIGHEST SYSTEM VOLTAGE	kV	245
	WET P.F. WITHSTAND VOLTAGE	kV	460
	DRY IMPULSE WITHSTAND VOLTAGE	kV	1050
	RADIO INTERFERENCE VOLTAGE	kV	154
4.	END FITTING DETAILS		
	BALL END FITTING - Forged Steel / SGI	IEC60120	16
	SOCKET END FITTING - Forged Steel / SGI	IEC60120	16

SR NO.	DESCRIPTION	MATERIAL	QTY.	REMARKS
6	SECURITY CLIP	S.S	01	
5	CORONA RING	ALUMINIUM ALLOY	01	
4	BALL FITTING	FORGED STEEL / SGI	01	
3	SOCKET FITTING	FORGED STEEL / SGI	01	
2	ROD (20 mm Ø Min)	FRP	01	
1	SILICONE SHED	SILICONE	01	

TITLE: 220 kV-70/90 KN SILICONE COMPOSITE INSULATOR	DRN	ANMOL	29/12/2020
	CKD	PVV	29/12/2020
	APD	PVV	29/12/2020
ALL DIMENSIONS ARE IN mm.	SCALE: NTS		PROJECTION
Finish :			
Drg. No.	Rev.No.		
0 985 474	00		

Client :-	APTRANSCO
Contractor :-	M/s. LAXMI TRANSMISSIONS
Project :-	Supply & Erection of (i) 220/132kV SS at Racherla, (ii) 220kV DC line (54kM) from 220kV SS Rachaganneri to the proposed 220kV SS Racherla, (iii) 220kV DC line (19.5kM) from 220kV SS Sullurpeta to the proposed 220kV SS Racherla & (iv) 2 Nos. feeder bays at 220kV Sullurpeta SS in Chittoor District on turnkey basis

REF:-

ABI ADITYA BIRLA INSULATORS HALOL - INDIA

ADITYA BIRLA INSULATORS HALOL

Rev. No.	Date	Description	Apd.
1	29-11-2019	Ring holder design and also clamp design changed	
2	03-02-2020	Changes in Holder and Clamp design	

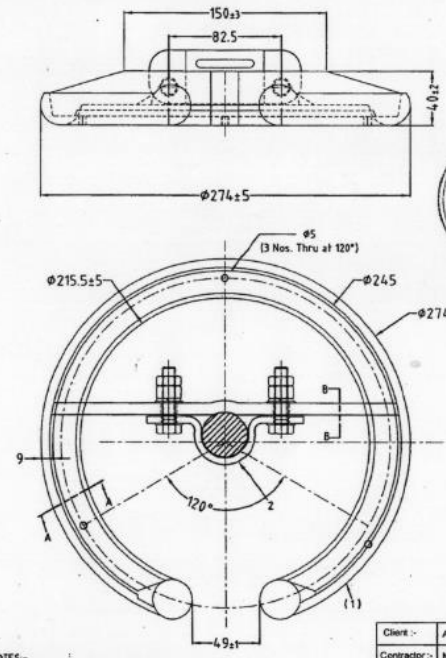

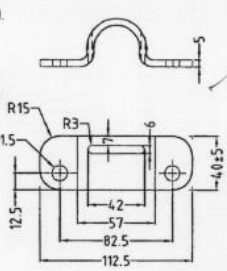

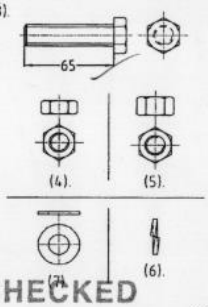

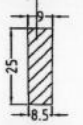

SECTION B-B

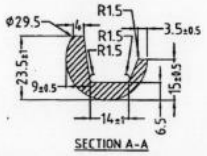

SECTION A-A

CHECKED

AEE DEE-1 DESIGNS DEE-2 DESIGNS EE DESIGNS

SR NO.	DESCRIPTION	SPECIFICATION	MATERIAL	QTY.	REMARKS
7	M10 PLAIN WASHER	IS:2016	MS HDG	2	
6	M10 SPRING WASHER	IS:3063	MS HDG	2	
5	M10 LOCK NUT	IS:1364	MS HDG	2	
4	M10 NUT	IS:1364	MS HDG	2	
3	M10 x 65 L- FULL THREADED BOLT	IS:1367	MS HDG	2	
2	CLAMP	IS:2062	MS HDG	1	
1	CORONA RING	BS 1490	AL. ALLOY	1	

TITLE: 274mm Half Ring For 70 / 90 /120 KN	SCALE NTS	FINISH	PROJECTION
	ALL DIMENSIONS ARE IN mm.		
REF:-	DRAWN BY	ANMOL	20/08/2019
	CHECKED BY	CPK	20/08/2019
	APPROVED BY	PVV	20/08/2019
ABI ADITYA BIRLA INSULATORS HALOL INDIA	Drg. No. 0 985 220/M4		Rev. No. 02

NOTES:-
1) All SHARP EDGES SHALL BE ROUNDED.
2) UNLESS SPECIFIED FILLET RADIUS,SHOULD BE 1mm.
3) BUFFING TO BE DONE AFTER CASTING.
4) UNTOLERANCED DIMENSIONS ARE MAINTAINED WITHIN ±2%
5) MARKING : MANUFACTURER LOGO

Client :-	APTRANSCO
Contractor :-	M/s. LAXMI TRANSMISSIONS
Project :-	Supply & Erection of (i) 220/132kV SS at Racherla, (ii) 220kV DC line (54kM) from 220kV SS Rachaganneri to the proposed 220kV SS Racherla, (iii) 220kV DC line (19.5kM) from 220kV SS Sullurpeta to the proposed 220kV SS Racherla & (iv) 2 Nos. feeder bays at 220kV Sullurpeta SS in Chittoor District on turnkey basis

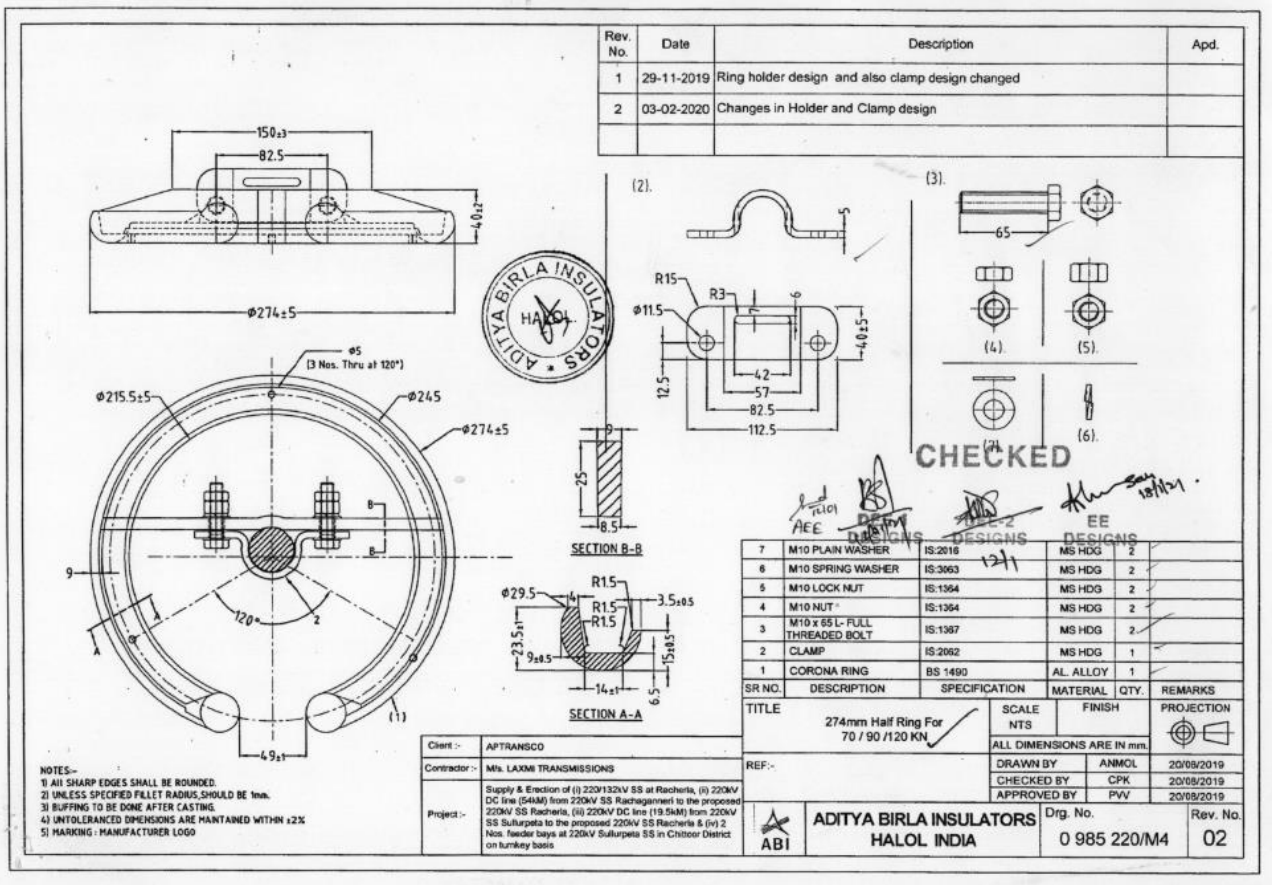
Rev. No. | Date | Description | Apd.
1 | 29-11-2019 | Ring holder design and also clamp design changed
2 | 03-02-2020 | Changes in Holder and Clamp design
150±3
82.5
40±2
Φ274±5
Φ5 (3 Nos. Thru at 120°)
Φ215.5±5
Φ245
Φ274±5
120°
49±1
(1)
(2).
(3).
R15
R3
Φ11.5
40±5
42
57
82.5
112.5
12.5
65
(4).
(5).
(6).
SECTION B-B
SECTION A-A
Φ29.5
R1.5
3.5±0.5
23.5±1
9±0.5
15±0.5
14±1
6.5
CHECKED
AEE
DEPTY DESIGNS
AEE-2 DESIGNS
EE DESIGNS
7 | M10 PLAIN WASHER | IS:2016 | MS HDG | 2
6 | M10 SPRING WASHER | IS:3063 | MS HDG | 2
5 | M10 LOCK NUT | IS:1364 | MS HDG | 2
4 | M10 NUT | IS:1364 | MS HDG | 2
3 | M10 x 65 L- FULL THREADED BOLT | IS:1367 | MS HDG | 2
2 | CLAMP | IS:2062 | MS HDG | 1
1 | CORONA RING | BS 1490 | AL. ALLOY | 1
SR NO. | DESCRIPTION | SPECIFICATION | MATERIAL | QTY. | REMARKS
TITLE
274mm Half Ring For 70 / 90 /120 KN
SCALE NTS
FINISH
PROJECTION
ALL DIMENSIONS ARE IN mm.
REF:-
DRAWN BY ANMOL 20/08/2019
CHECKED BY CPK 20/08/2019
APPROVED BY PVV 20/08/2019
ABI
ADITYA BIRLA INSULATORS
HALOL INDIA
Drg. No. 0 985 220/M4
Rev. No. 02
Client :- APTRANSCO
Contractor :- M/s. LAXMI TRANSMISSIONS
Project :- Supply & Erection of (i) 220/132kV SS at Racherla, (ii) 220kV DC line (54kM) from 220kV SS Rachaganneri to the proposed 220kV SS Racherla, (iii) 220kV DC line (19.5kM) from 220kV SS Sullurpeta to the proposed 220kV SS Racherla & (iv) 2 Nos. feeder bays at 220kV Sullurpeta SS in Chittoor District on turnkey basis
NOTES:-
1) All SHARP EDGES SHALL BE ROUNDED.
2) UNLESS SPECIFIED FILLET RADIUS,SHOULD BE 1mm.
3) BUFFING TO BE DONE AFTER CASTING.
4) UNTOLERANCED DIMENSIONS ARE MAINTAINED WITHIN ±2%
5) MARKING : MANUFACTURER LOGO
ADITYA BIRLA INSULATORS HALOL